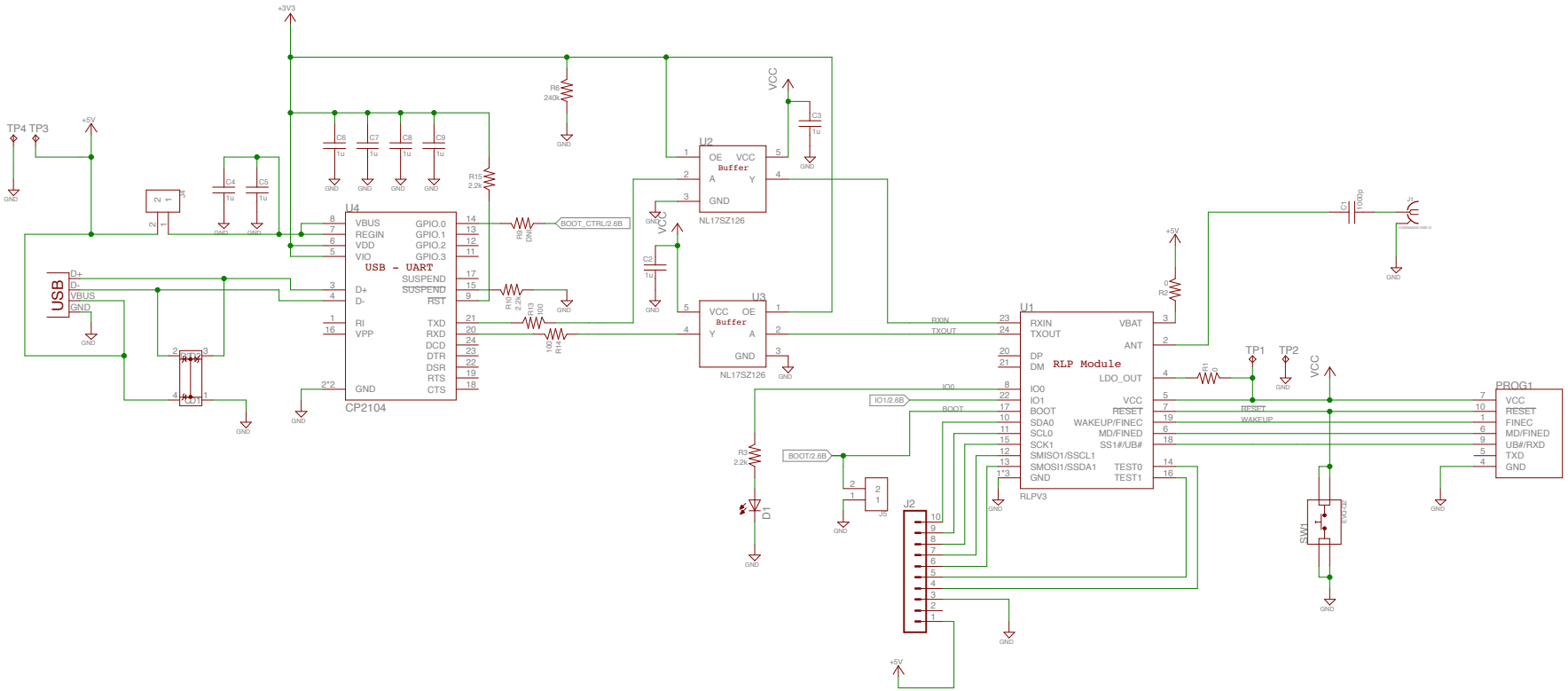

LINK LABS

RLP Eval Board Rev4

10/16/15 1:19 AM

Sheet: 1/2

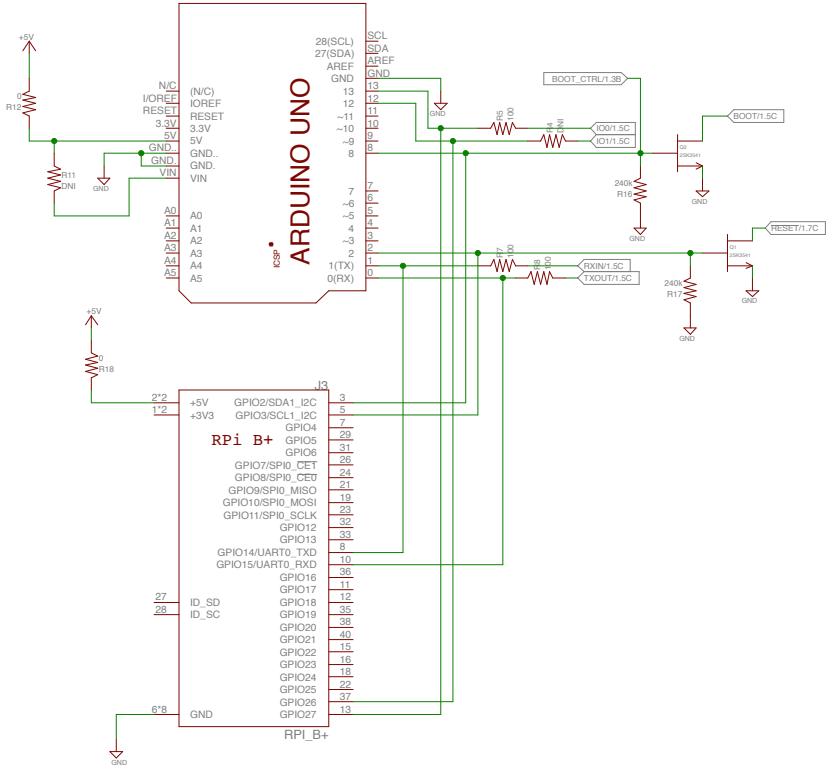

LINK LABS

RLP Eval Board Rev4

10/16/15 1:19 AM

Sheet: 2/2